SCP Structured Cable Products™
Quality Installations Deserve Quality Products

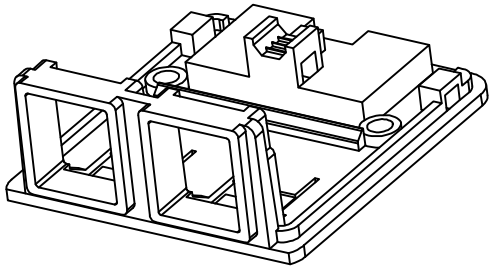

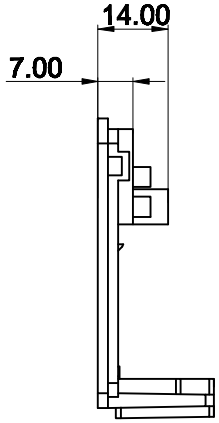

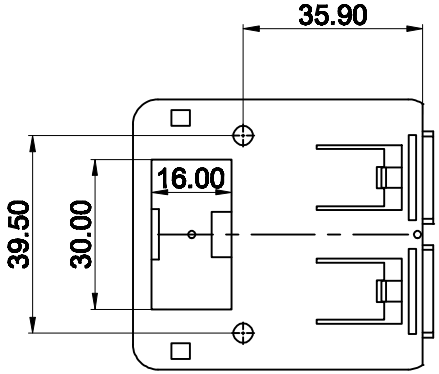

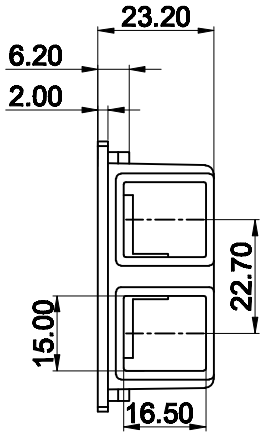

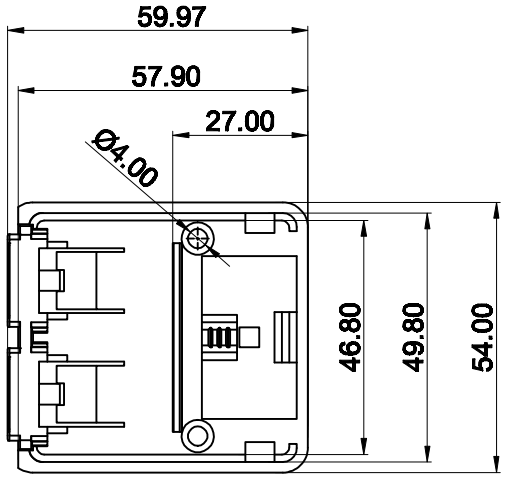

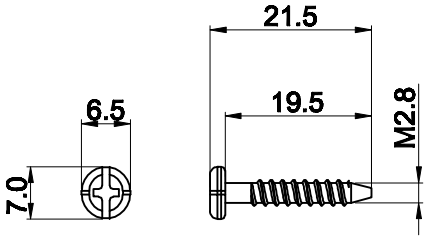

K2-3.5*19.7-TP
(M2.8x20mm)

Colors Available: White

MATERIAL: ABS UL94-V0
ENCLOSURE: K2-3.5*19.7-TP (M2.8x20mm) screws x 2

Scale	1:1.5					All Copy Rights Reserved	
3rd Angle Projection						CAT5E DUAL PORT SURFACE MOUNT BOX, UNLOADED	
Unit	mm					SCP P/N 213-XX	
Date	2015-09-18						
Tolerance							
~20	~50	~150	150~	ANGLE		Drawn by	Checked by
±0.2	±0.4	±0.5	±1.5	±2°		Gyz	Santiago